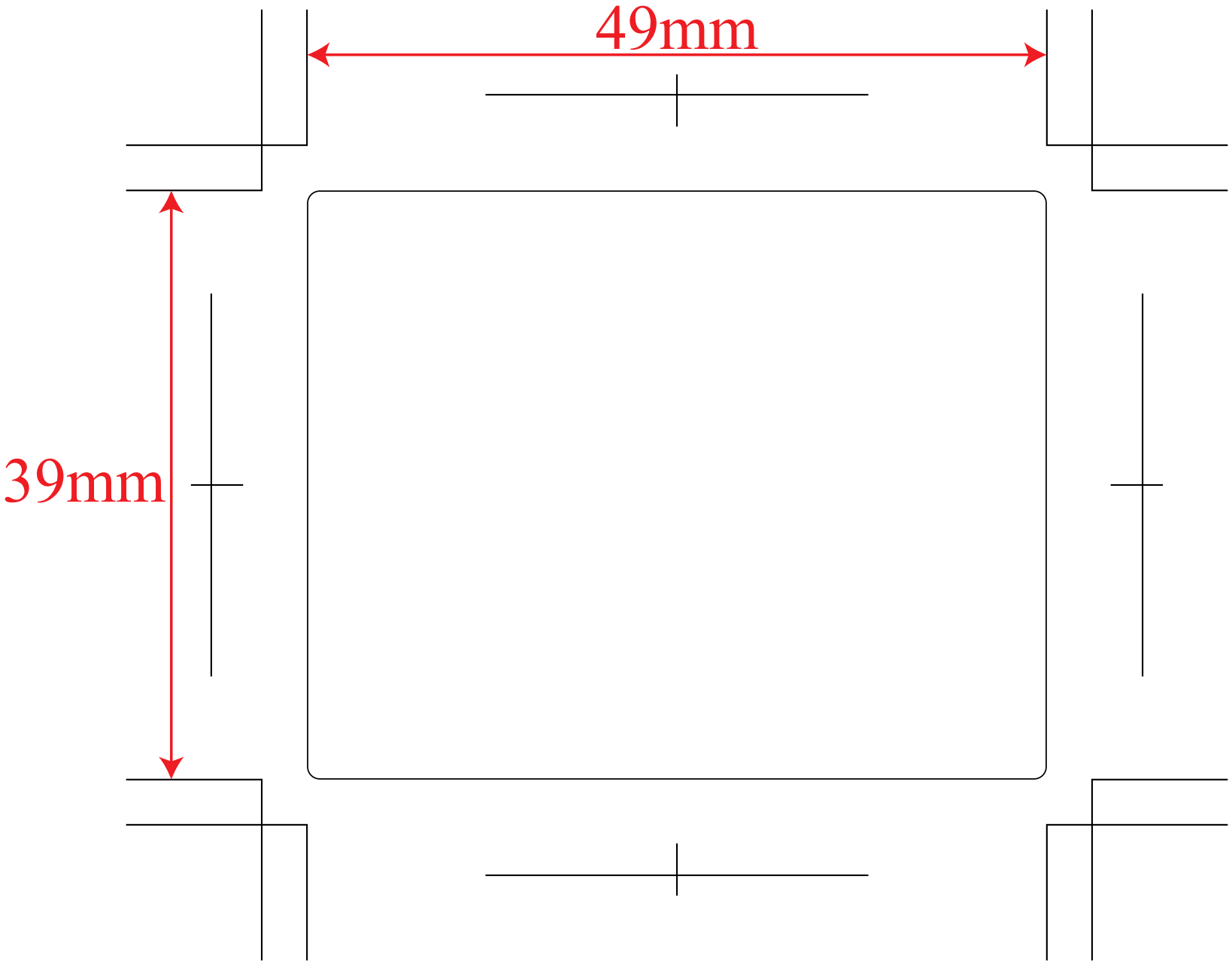
49mm
39mm